MASTECH® MS8251C

DIGITAL MULTIMETER

OPERATION MANUAL

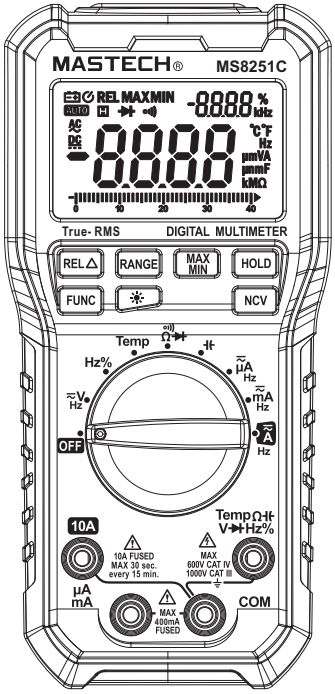

1. Safety Information

⚠ Warning

To reduce the risk of electrical shock, product damage or personal injury, please follow the safety instructions described in the user manual. read the user manual before using the meter.

This instrument meets GB/T 13978-92 and GB4793.1-2007 (IEC-61010-1,IEC-61010-2-032) standards for safety requirements for electronic testing instruments,pollution degree 2,And over voltage rating of CAT III 1000V and CAT IV 600V.
Follow all safety instructions to ensure safe use of the instrument.Proper use and protection of the meter will ensure long life of the meter.

1.1 Preparation

1.1.1 When using the meter, follow the following safety rules:
- Always take precaution to prevent electrical shock
- Never misuse the instrument

1.1.2 Check to see if the meter or any components were damaged during shipment.
1.1.3 Check the meter and accessories thoroughly before using.
1.1.4 Inspect test leads and probes for cracks, breaks or crazes on the insulation before using the meter.
1.1.5 Use test leads provided with the unit.If necessary, replace test leads with identical specifications.

1.2 Use

1.2.1 Turn the rotary switch to the required function and range to be measured.
1.2.2 When using the CAT IV environment, if the measuring voltage between terminals and earth ground exceeds 600V, CAT III environments or voltage measurement between the terminal and the earth more than 1000V, do not measure voltage.
1.2.3 Always be careful when working with voltages above 60V DC or 30V AC RMS. Keep fingers behind the probe barriers while measuring.Never touch probes during measurement.
1.2.4 Choose the highest range when the value to be measured is unknown.
1.2.5 Remove test leads before switching functions on the rotary switch.
1.2.6 Do not perform resistance, capacitance, diode and continuity measurements on powered circuits.
1.2.7 Never connect the test leads across a voltage source while the rotary switch is in the resistance, diode or continuity mode. Doing so can damage the meter.
1.2.8 Power off the circuit and discharge capacitors before testing capacitance.
1.2.9 Do not place the meter in any environment with high pressure, high temperature, dust, explosive gas or vapor.
1.2.10 Stop using the meter if any failure or abnormal function is observed.
1.2.11 Do not use meter unless battery cover is in place a secured.
1.2.12 Avoid direct sunlight, exposing batteries to humidity, any strong magnetic field, or high temperatures to ensure the extended life of the meter.

1.3 Mark

⚠ Note (Important safety information. Refer to the operation manual)

Dangerous Voltage.

Compliance with requirements for double insulation (Category II)

CAT III Refers to the impulse withstand voltage protection level in accordance with IEC-61010-1 standard overvoltage(installation) category III, pollution degree 2

CAT IV Refers to the impulse withstand voltage protection level in accordance with IEC-61010-1 standard overvoltage(installation)category IV,pollution degree 2

CE Meter complies with European Community (EU) standards

Complies with U.S. and Canadian safety standards

Earth Ground

1.4 Maintenance

1.4.1 To avoid electric shock or personal injury, repairs or servicing not covered in this manual should be performed only by qualified personnel.

1.4.2 Remove test leads before opening battery cover

1.4.3 To avoid incorrect readings causing electric shock or personal injury,when low battery symbol,“ ” appears, replace batteries immediately.

1.4.4 The meter can be cleaned with a soft cloth to remove any oil, grease or grime. Do not use liquid

solvent or detergent.

1.4.5 When the instrument is not in use, turn rotary switch to “**OFF**”.

1.4.6 If the instrument is not to be used for an extended period of time, remove the batteries to prevent damage to the instrument.

2. Features and Components

- The MS8251C is a portable, hand-held yet professional meter that features an LCD with backlight, overload protection and low battery indicator. These meters are easy to use with one hand, suitable for professional users or amateurs, and ideal for school or home use.
- Functions include: AC/DC voltage, AC/DC current, resistance, capacitance, continuity, diode test, frequency and duty cycle.
- Auto and manual range.
- Auto power off.
- Max measurement.
- Min measurement.
- Relative measurement
- Reading Hold function.
- True RMS
- Simultaneously display frequency during AC voltage/ current measurements.
- Non-contact voltage test.

2.1 Components

(1) Non-contact voltage detection indicator
(2) LCD screen
(3) Function buttons
(4) Rotary switch
(5) Input sockets
(6) Non-contact voltage sensor

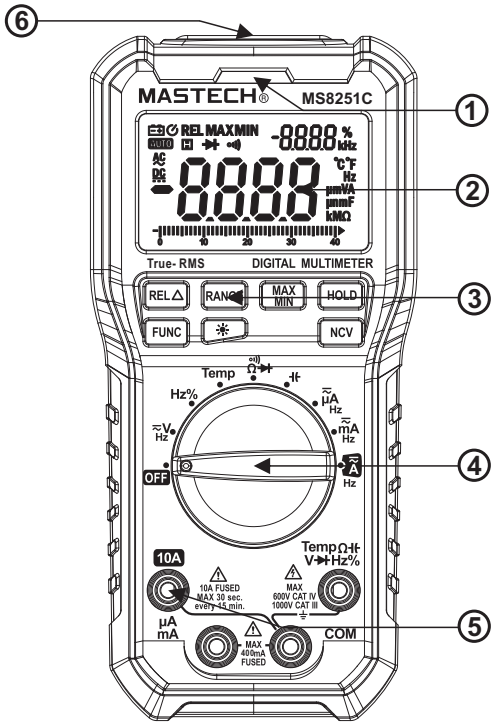

2.2 Buttons and Symbols

HOLDbutton: hold current reading on screen.
FUNC button: switch between functions.
RANGE button: switch between auto/manual ranges.
REL button: relative reading
MAX/MIN button: switch between maximum/ minimum readings.
☀ button: turn on/off backlight.
EMP position: thermocouple temperature measurement.
OFF position:turn off meter.
Temp V Hz% jack:voltage, current, resistance, capacitance, diode, continuity, frequency, duty cycle, temperature input terminal.
COMjack: common input terminal.
μAmA jack: current measurements <400mA.
10A jack: current measurements >400mA to 10A.

2.3 LCD display

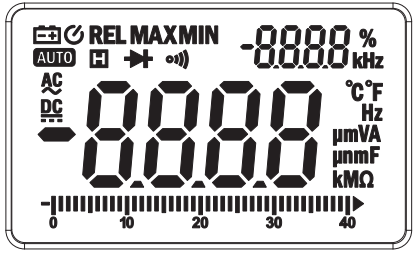

~	Alternating current
⎓	Direct current
⯈|	Diode
•)))	Continuity
AUTO	Autoranging mode
MAX	Maximum value
MIN	Minimum value
⏲	Auto power off
⊟	Low battery
%	Percentage (duty cycle)
Hz, kHz	Hertz, Kilohertz (frequency)
mV, V	Millivolt, Volt (voltage)
μA, mA, A	Micro amp, Milliamp, Amp (current)
nF, μF, mF	Nanofarad, Microfarad, Millifarad (capacitance)
Ω, kΩ, MΩ	Ohm, Kilohm, Megaohm (resistance)
REL	Relative value
NCV	Non-contact voltage detection
H	Data hold

3. Specifications

The Meter should be calibrated annually between 18°C~28°C and a relative humidity less than 75%.

3.1 General Specifications

3.1.1 Manual and auto range
3.1.2 Full range overload protection
3.1.3The maximum voltage allowed between the measuring end and the earth:CAT IV measurement environment for 600V DC or AC(RMS),CAT III measurement environment for 1000VDC or AC(RMS).
3.1.4 Maximum working height: 2000m
3.1.4 Maximum working height: 2000m
3.1.5 Display:LCD
3.1.6 Maximum display value:4000
3.1.7 Polarity indication:“-” indicates negativepolarity
3.1.8 Overload indication:“0L” or “-0L”
3.1.9 Sampling frequency: 0.4s (digital display)/ 0.04s (bar graph).For current readings, 1s (digital display) / 0.1s (bar graph)
3.1.10 Units display: functions and units
3.1.11 Auto power off: 15 minutes
3.1.12 Power supply: 9V 6F22 battery
3.1.13 Low battery indication: LCD displays“⊟”
3.1.14 Temperature coefficient: less than 0.1x specified accuracy/°C
3.1.15 Operating temperature:0°C ~40°C
3.1.16 Storage temperature:-10°C ~50°C
3.1.17 Dimensions:175×85×52mm
3.1.18 Weight:approx.420g(including battery)

3.2 Technical Specifications

3.2.1 True RMS Characteristics

- For non-sinusoidal signal measurement,the Meter provides more accurate measurement than the traditional averaging method.
- If in AC current mode,the Meter may display a random reading between 1 and 50 when the input is not active. This will not affect the accuracy of measurement.
- True RMS requires a minimum input level,AC current or voltage should be 2%~100%of the maximum level.

3.2.2 Impedance Characteristics

Normal impedance(10M) with normal testing capabilities. Ghost voltage can occur when power supply

3.2.3 DC Voltage

range	Resolution	Accuracy
400mV	0.1mV	±(0.8% of reading + 3 digits)
4V	0.001V	±(0.5% of reading + 5 digits)
40V	0.01V	
400V	0.1V	
1000V	1V	±(0.8% of reading + 3 digits)

- Input impedance: 10MΩ
- Overload protection: 400mV range: 250V DC or AC (RMS),4.0V-1000V range: 1000V DC/AC (RMS)
- Maximum input voltage: 1000V DC

3.2.4 AC Voltage

range	Resolution	Accuracy	Frequency Range
400mV	0.1mV	±(1.5% of reading + 5 digits)	40 ~ 60Hz
4V	0.001V	±(1.2% of reading + 5 digits)	40 ~400Hz
40V	0.01V		
400V	0.1V	±(1.0% of reading + 3 digits)	40 ~ 400Hz
1000V	1V		

- Input impedance: 10MΩ
- Overload protection: 400mV range: 250V DC or AC (RMS),4.0V-1000V range: 1000V DC/AC (RMS)
- Maximum input voltage: 1000V AC (RMS)
- Response:True RMS

3.2.5 Resistance

range	Resolution	Accuracy
400Ω	0.1Ω	±(0.8% of reading + 5 digits)
4kΩ	0.001kΩ	
40kΩ	0.01kΩ	
400kΩ	0.1kΩ	
4MΩ	0.001MΩ	
40MΩ	0.1MΩ	±(1.5% of reading + 5 digits)

- Open circuit voltage: approx. 1.0V
- Overload protection: 250V DC /AC (RMS)

3.2.6 Capacitance

range	Resolution	Accuracy
4nF	0.001nF	±(4.0% reading + 5 digits)
40nF	0.01nF	±(3.0% reading + 3 digits)
400nF	0.1nF	
4μF	0.001μF	
40μF	0.01μF	
400μF	0.1μF	
4mF	0.001mF	±(4.0% reading + 5 digits)
40mF	0.01mF	

- Overload protection: 250V DC or AC (RMS)

3.2.7 Diode Test

range	Resolution	Function
⊣▷⊢	0.001V	Shows approximate forward voltage of diode

- Forward DC current : approx.1mA
- Revers DC voltage: approx. 3.2V
- Overload protection:250V DC/AC(rms)

3.2.8 Continuity

range	Resolution	Function
)))	0.1Ω	If measured resistance is less than 50Ω, a buzzer will sound

- Open circuit voltage: approx. 1.0V
- Overload protection:250V DC/AC(rms)

3.2.9 Frequency

3.2.9.1 Frequency (V position):

range	Resolution	Accuracy
40Hz	0.01Hz	±(1.5% reading + 5 digits)
400Hz	0.1Hz	
4kHz	0.001kHz	
10kHz	0.01kHz	

- Range: 10Hz~10kHz
- Input Voltage: ⩾0.2V AC (Input voltage should increase along with the frequency)

3.2.9.2 Frequency (Hz position):

range	Resolution	Accuracy
40Hz	0.01Hz	±(1.5% reading + 5 digits)
400Hz	0.1Hz	
4kHz	0.001kHz	±(1.5% reading + 5 digits)
40kHz	0.01kHz	
400kHz	0.1kHz	
4MHz	1kHz	
40MHz	10kHz	

- Overload protection:250V DC/AC(rms)
- Input Voltage:3V peak to peak AC

3.2.9.3 Duty Cycle

range	Resolution	Accuracy
1%-99%	0.1%	±2.0%

3.2.10 DC Current

range	Resolution	Accuracy
400μA	0.1μA	±(1.0% reading + 5 digits)
4000μA	1μA	
40mA	10μA	
400mA	100μA	
10A	10mA	±(2.0% reading + 5 digits)

Overload protection:
μA and mA position: Fuse FF600mA/1000V,
A position: Fuse FF10A/1000V.
When the target current is larger than 5A, do not continue measurement for more than 10 sec. Pause for 1 minute after the measuring.

3.2.11 AC Current

range	Resolution	Accuracy
400μA	0.1μA	±(1.5% reading + 5 digits)
4000μA	1μA	
40mA	10μA	
400mA	100μA	
10A	10mA	±(3.0% reading + 5 digits)

Overload protection:
μA and mA grade: Fuse FF600mA/1000V,
A position: Fuse FF10A/1000V.
- Frequency range: 40 ~ 400Hz
- Response: True RMS

When the target current is larger than 5A, do not continue measurement for more than 10 sec. Pause for 1 minute after the measuring.

3.2.12 Temperature

Range	Input	Test Range	Accuracy
0~1000°C	Ambient Temp	±2 digits	±(1.0% of reading +3 digits)
	400°C	±4 digits	
	1000°C	±5 digits	
32~1832°F	Ambient Temp	±2 digits	
	800°F	±4 digits	
	1800°F	±20 digits	

4. Using the Meter

4.1 Data Hold

4.1.1 During a measurement, press the "**HOLD**" button once to hold the reading.
4.1.2 Press "**HOLD**" again to release the hold.

4.2 Manual Range

4.2.1 In voltage, current, resistance and capacitance modes, the default range is "AUTO"
4.2.2 Press "**RANGE**" to enter manual ranging.Each press switches to a higher range.Pressing the button at the highest range will return to the lowest range.
4.2.3 Hold "**RANGE**" to return to "AUTO"
4.2.4 Pressing "**RANGE**" in Max/Min mode will return the meter to normal reading.

Note: Manual range is disabled in frequency mode.

4.3 Relative Measurement

4.3.1 Press "**REL△** to enter relative measurement. This will store the reading when pressed and display the difference between current reading and the stored reading.
4.3.2 Press "**REL△**" again to return to normal.

4.4 Maximum/Minimum Reading

4.4.1 Press "**MAX/MIN**" to display the maximum value recorded

4.4.2 Press "**MAX/MIN**" again to display the minimum value recorded.

4.4.3 Hold "**MAX/MIN**" to return to normal readings.

4.5 Function Switching

4.5.1 In voltage or current modes, press "**FUNC**" to switch between AC and DC.

4.5.2 In resistance, diode or continuity modes, press "**FUNC**" to switch between measurements.

4.5.3 In temperature mode, press "**FUNC**" to switch between °C and °F.

4.6 Backlight

4.6.1 Press "☀"to turn on backlight.Press again to turn off.

4.7 Auto Power off

4.7.1 If there is no operation for 15 minutes after turning the machine on, the meter will automatically power off to save the battery.

4.7.2 After automatic power-off, press any key to turn the meter on again.

4.7.3 Holding the "FUNC" key when powering on will cancel automatic power-off function.

4.8 Non-Contact Voltage (NCV)

4.8.1 With the rotary switch in any position except OFF, hold down the "**NCV**" button.

4.8.2 Move the tip of the meter near the voltage source or conductor. If the voltage detected is greater than 110VAC, the buzzer will beep and the NCV indicator near the tip of the meter will flash.

Note:

1.Even though there is no indication,voltage may still exist.Do not rely solely on NCV detector to determine the presence of voltage in a wire.The measurement may be affected by the design of the outlet,type of insulation and other external factors.

2.The voltage sensing indicator may turn on when a voltage is fed to the meter.

3.Other external interference(ex.Flashlight,motor)may trigger the NCV sensor.

4.9 AC/DC Voltage

Voltage is the electrical potential difference between two points in a circuit. AC polarity changes over time, where DC polarity stays constant.

Measuring AC or DC voltage:

4.9.1 Move the rotary switch to the "**V**" position.

4.9.2 Connect the red test lead to the "**V**" jack and the black test lead to the "**COM**" jack.

4.9.3 Connect the test leads to the voltage source or load.

4.9.4 The measured voltage will be displayed.For DC voltage, polarity of the red test lead will be indicated.

4.9.5 Press "**FUNC**" to switch between AC/DC voltage.

4.10 Resistance

4.10.1 Move the rotary switch to the "⏭Ω"position.

4.10.2 Connect the red test lead to the "**Ω**" jack and the black test lead to the "**COM**" jack.

4.10.3 Connect the test leads to the circuit.

4.10.4 Resistance value will be displayed.

4.11 Continuity

4.11.1 In resistance mode, press "**FUNC**" to switch to continuity mode.
4.11.2 Connect the red test lead to the input jack and the black test lead to the "COM" jack.
4.11.3 Connect the test leads to the circuit.
4.11.4 If the resistance of the circuit is less than 50Ω, a buzzer will sound.

4.12 Diode

4.12.1 In continuity mode, press "**FUNC**" to switch to diode mode.
4.12.2 Connect the red test lead to the input jack and the black test lead to the "COM" jack.
4.12.3 Connect the red test lead to the anode (+) and the black lead to the cathode (-) of the diode.
4.12.4 The meter will display the forward biased voltage drop across the diode.

4.13 Capacitance

4.13.1 Move the rotary switch to the "⊣⊢"position.
4.13.2 Connect the red test lead to the input jack and the black test lead to the "**COM**" jack.
4.13.3 Connect the test leads to the circuit/capacitor.
4.13.4 Capacitance value will be displayed.

4.14 Frequency and Duty Cycle

4.14.1 Move the rotary switch to the "**Hz%**" position.
4.14.2 Connect the red test lead to the input jack and the black test lead to the "**COM**" jack.
4.14.3 Connect the test leads to the circuit.
4.14.4 The measured frequency and duty cycle will be displayed simultaneously.

4.15 Current

4.15.1 Remove power to the circuit and discharge all capacitance.
4.15.2 Move the rotary switch to the appropriate position (μA, mA or A).
4.15.3 Connect the black test lead to the "**COM**" jack. If the current to be measured is <400mA, connect the red test lead to the "**μAmA**" jack.If the current to be measured is >400mA, connect the red test lead to the "**10A**" jack.
4.15.4 Break the circuit.Connect the test leads across the break, with the red lead to the higher voltage side, and the black lead to the lower voltage side.
4.15.5 Power on the circuit and the current value will be displayed.If "**OL**" appears on the display, it means the current exceeds the selected mode.Move the rotary switch to the next higher position.

5. Maintenance

5.1 Replace Battery

⚠ Warning

To avoid electrical shock, damage or personal injury, remove test leads before openning battery cover.

5.1.1 If the low battery symbol"▭" appears, the battery needs to be changed.
5.1.2 Unscrew the battery cover from the back of the meter and remove the old battery.
5.1.3 Insert a new battery and replace the cover and tighten it to the meter.

Note:
Be sure to note the battery polarity when replacing.

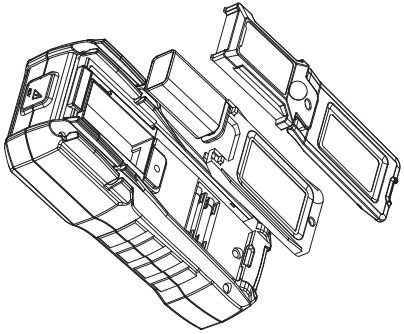

5.2 Test Lead Replacement

⚠ Warning

Replace the test leads with identical or compatible leads.lead spec:1000V 10A.

Replace test leads if leads become worn.

6. Accessories

1.Test Leads		1 pair
2.Manual		1 pc
3.Battery	9V 6F22	1 pc
4.multifunctional test socket		1pc
5.electromagnetic pendant		1pc
6.K-type temperature probe		1pc